Infrared Physics & Technology 79 (2016) 101–112

Contents lists available at ScienceDirect

Infrared Physics & Technology

journal homepage: www.elsevier.com/locate/infrared

Digital readout integrated circuit (DROIC) implementing time delay and integration (TDI) for scanning type infrared focal plane arrays (IRFPAs)

Omer Ceylan, Atia Shafique, Abdurrahman Burak, Can Caliskan, Melik Yazici, Shahbaz Abbasi, Arman Galioglu, Huseyin Kayahan, Yasar Gurbuz *

Sabancı University, Faculty of Engineering and Natural Sciences, Tuzla, Istanbul 34956, Turkey

HIGHLIGHTS

- A DROIC implementing TDI for scanning type LWIR IRFPAs is proposed.
- The quantization noise performance of the conventional PFM architecture is improved.
- Significantly improved SNR values are measured for the low illumination levels.
- The proposed DROIC proves the benefit of digital readout technique for TDI applications.

ARTICLE INFO

Article history:
Received 16 August 2016
Revised 28 September 2016
Accepted 29 September 2016
Available online 30 September 2016

ABSTRACT

This paper presents a digital readout integrated circuit (DROIC) implementing time delay and integration (TDI) for scanning type infrared focal plane arrays (IRFPAs) with a charge handling capacity of 44.8 Me^- while achieving quantization noise of 198 e^- and power consumption of 14.35 mW. Conventional pulse frequency modulation (PFM) method is supported by a single slope ramp ADC technique to have a very low quantization noise together with a low power consumption. The proposed digital TDI ROIC converts the photocurrent into digital domain in two phases; in the first phase, most significant bits (MSBs) are generated by the conventional PFM technique in the charge domain, while in the second phase least significant bits (LSBs) are generated by a single slope ramp ADC in the time domain. A 90×8 prototype has been fabricated and verified, showing a significantly improved signal-to-noise ratio (SNR) of 51 dB for low illumination levels (280,000 collected electrons), which is attributed to the TDI implementation method and very low quantization noise due to the single slope ADC implemented for LSBs. Proposed digital TDI ROIC proves the benefit of digital readouts for scanning arrays enabling smaller pixel pitches, better SNR for the low illumination levels and lower power consumption compared to analog TDI readouts for scanning arrays.

© 2016 Elsevier B.V. All rights reserved.

1. Introduction

Infrared imaging technology was developed initially in 1950s to be used in military surveillance systems and it has been a very useful tool for many military and civilian applications such as IR search and track, medical imaging, astronomy, earth observation, missile guidance, process control, environmental monitoring and spectroscopy [1–4]. Although third generation 2D staring array IRFPAs are very popular, there is still a need for scanning array systems. Scanning array systems are used in applications such as earth observation from a satellite, quality checks of products moving on a conveyor belt, reconnaissance from an aircraft. All these applications naturally include the scanning operation, which means there is no need for an additional mechanical scanner like in the second generation infrared imaging systems. Almost all of these scanning array systems use TDI method, which is used to increase the signal-to-noise-ratio (SNR) due to the limited integration time of scanning array systems. Similarly, TDI improves SNR when imaging fast moving objects [5] and enables low noise imaging under the low illumination conditions [6]. Thus, it is important to design high performance TDI ROICs following industry's trend of reduction in size, weight and power (SWaP).

TDI is implemented by adding the contribution of each TDI pixel and averaging the total value by dividing it by the number of TDI elements. The scanning optic directs the IR radiation of the same scene to the pixels on the same row (along track), thus same image data is stored on different storage elements, which also means

* Corresponding author.
E-mail address: yasar@sabanciuniv.edu (Y. Gurbuz).

http://dx.doi.org/10.1016/j.infrared.2016.09.015
1350-4495/© 2016 Elsevier B.V. All rights reserved.

increasing the integration time by multiple captures of the same scene. The stored data on different elements are then summed up and averaged to constitute the desired image with an improved SNR. With the use of TDI, SNR improvement ratio compared to a single pixel operation is the square root of the number of elements in the line [7].

This work presents a novel digital TDI ROIC and proves the benefit of using digital ROIC architectures for scanning array systems to meet the SWaP trend. Using the digital ROIC architecture for TDI applications enabled 15 μm small pixel pitch with oversampling rate of 2. The implemented digital TDI ROIC shows very high SNR values especially for the low illumination scenarios such as 51 dB for 280,000 collected electrons and low power consumption such as 14.35 mW for nominal input current of 10 nA. The proposed work also has the potential of achieving significantly high SNR value for high illumination scenarios if carefully implemented, considering switching noise issues. The measured SNR for half well fill is 65 dB and 96 dB dynamic range is achieved with 16-bit resolution. A 90×8 pixel array is implemented in 180 nm CMOS technology.

This paper is organized as following. After this introductory section, in Section 2, analog and digital TDI ROICs in the literature are discussed. Section 3 presents the proposed digital TDI ROIC architecture. Implementation of the proposed digital TDI is given in Section 4. Section 5 shows the measurement results. Finally, in Section 6, a comparison of the analog TDI ROICs and proposed digital TDI ROIC is given, which concludes the manuscript.

2. Review of TDI ROIC implementations

Due to the technological limitations, first generation ROICs designed for the scanning array TDI applications were utilizing analog design techniques and there are many different analog TDI ROIC implementations in the literature. Charge coupled devices (CCDs) can be accepted as the first analog TDI implementations. CCDs operate in the charge domain meaning that charges are collected by controlling CCD cells with timing signals, and then propagated and summed to form the final output. However, CCD circuits require non-standard semiconductor processing [8] and high voltage operation which means high power consumption. The main advantage of CCDs is almost noiseless charge transfer mechanism [9]. Apart from the CCD technology which is not a standard CMOS process, there are many analog CMOS TDI ROIC implementations. One way of implementing analog TDI ROIC is to use multiple storage elements like capacitors to store the data of the same scene on different TDI elements (pixels) until this data is available to all TDI elements. After all data coming from all TDI elements on separate capacitors are available, they are switched and added in a single summing amplifier and sent to output [10,11]. This method employs a single amplifier and consumes less power compared to the method employing multiple amplifiers. The main drawback of this method is the large chip area due to many storage elements required. Fig. 1 shows the implementation of an analog TDI ROIC. If oversampling TDI is implemented in this configuration, a lot of TDI storage elements are needed, hence very long sensitive analog signal routes are needed from pixel to the storage capacitors.

The other way of implementing analog TDI ROIC is to use multiple summing amplifiers. Each amplifier is dedicated to a certain scene. When the same scene comes to a TDI element, this data is transferred to the dedicated amplifier and summed there. This operation is repeated for all TDI elements and when data from all TDI elements is transferred to dedicated summing amplifier and summed there, at this point the output data is available [12–14]. Drawbacks of this method are high power consumption due to multiple amplifiers, offset and gain variations of summing amplifiers which bring non-uniformities. To solve these difficulties some other methods such as current mode operation has been offered. In this method, contribution of each TDI element is converted to the current domain and amplified in the pixel, and then added in the current domain, which eliminates the use of capacitors in summing amplifiers [15]. This method suffers from low dynamic range. It is not possible to handle very low and high current scenarios at the same time with this method. Another example of analog TDI implementations is the adjacent pixel signal transfer architecture similar to CCD operation. In this method, each TDI element contribution is transferred to the adjacent pixel with the help of an off-pixel amplifier [16] or an in-pixel amplifier [8]. This method also suffers from the low dynamic range, since it is suitable mostly for CMOS image sensors with very low input current. In this method, pixel capacitor can easily be saturated with high input current levels. A different version of the adjacent pixel signal transfer method is described in [17]. In this method, an analog sampling stage, which includes an amplifier and two capacitors, is put in pixel. The analog sampling stage integrates the signal of the previous analog sampling stage with the sampled photo signal of the corresponding pixel and subtracts the reset level, hence in-pixel correlated double sampling (CDS) is also included in this architecture. Another analog TDI method proposed to improve the dynamic range of analog TDI ROICs is the self-adaptive scanning architecture [18]. In this architecture, there is an additional calibration pixel detecting the incoming flux and deciding which setting will be used for the TDI pixels next to the calibration pixel. Depending on the flux level, capacitance values of the preamplifiers are adjusted, hence dynamic range of the TDI ROIC is improved. All of these analog TDI architectures suffer more or less from the sensitive analog signal routing problems. There are also some methods to minimize these signal routing effects. Since all pixels in a column or row share a long output bus, and there are many digital control signals and power lines passing nearby these sensitive lines, these signals should be immune to any interference [19]. As it can be seen from the above examples, analog TDI ROIC implementations require careful signal routing, are limited in dynamic range, and generally consume high power due to high swing amplifiers required to improve the dynamic range. They are also limited in charge handling capacity and occupy large chip area.

Although digital ROICs have been gaining ground in recent years, there are only a few digital TDI ROIC implementations in the literature [20–27]. Lepage et al. gives an overview of TDI architectures for CMOS image sensors in his paper and describes some techniques for the TDI readout architectures [20]. The paper applies column parallel digital readout technique to TDI applications and proposes a technique to implement TDI functionality for CMOS image sensors. Fig. 2 shows the digital TDI architecture proposed by [20]. Each column of pixels is connected to a column ADC with enough amount of memory locations. A ramp signal is compared with the pixel output and clock cycles are counted until the comparator is triggered. Comparator is triggered when ramp signal and integration capacitor node are at the same voltage level. After the frame ends, counter value is stored in a memory location dedicated to the particular scene. When another pixel contribution to that particular scene available, the value stored in the memory location is called back to the counter. In this way, there is no need for a real adder. Addition is done by calling the previously stored value and continuing from this stored value [21]. The counter used in column parallel ADC here is a unidirectional counter. There is also bi-directional counter version of the column parallel ADC architecture [22]. Correlated double sampling (CDS), which is used to eliminate reset noise, is done in a different way in the bi-directional counter version of the column parallel ADC architecture. Counter counts downward while capturing the reset signal

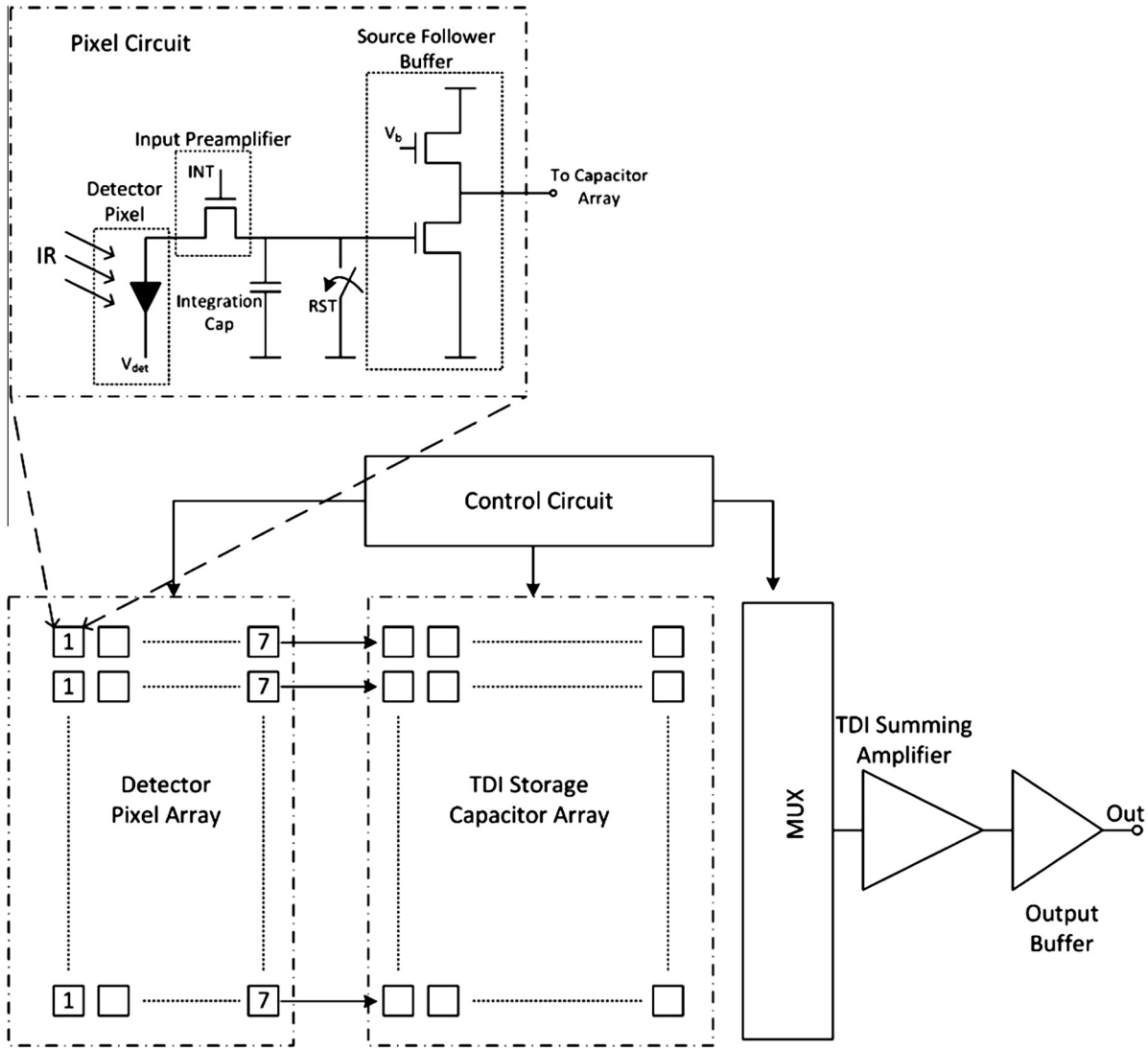

Fig. 1. Analog TDI ROIC example.

and counts upward while capturing the actual signal, in this way the noise signal is subtracted from the total signal.

Another digital TDI implementation that uses column-parallel ADC architecture is described in the US patent [23]. The only difference in this patent compared to the previous US patents, is the use of a column adder instead of a counter. Every time a pixel contribution is required to be added with the previous pixel contributions of the same scene, the previously stored value is called back from the memory and added with the newest pixel contribution and stored back to the memory. Since the adder will be occupying larger area than a unidirectional counter, this architecture is not as area-efficient as the previous methods. There are also two examples of the digital TDI ROIC using an analog accumulator [24] and a digital accumulator [25] together with a column-parallel ADC from the same group. The analog accumulator version utilizes a summing amplifier and multiple storage capacitors per column. The output of the summing amplifier is connected to the column ADC. On the other hand, the digital accumulator version utilizes a cyclic ADC per column that is connected to a digital accumulator, which incorporates an adder and multiple memories together with read/write control gates. The main drawback of the last two examples is the low speed. Since there are 128 TDI stages and for each line all of the TDI stages are connected to the ADC and sent to the accumulator one by one, it takes long time to readout all TDI stages. They are not capable of integrate-while-read mode. They always operate in integrate-then-read mode. The analog accumulator version also occupies a large chip area due to the use of multiple storage capacitors per column.

There is also pixel level digital TDI implementation using the pulse-frequency-modulation technique together with orthogonal transfer that is shown in Fig. 3 [26,27]. A simple PFM circuit is utilized with the direct injection input preamplifier and orthogonal transfer structure. To minimize the quantization noise, a 1fF very small capacitor is used as an integration capacitor, which means increased number of comparator triggers, hence more power consumption. Although a very small integration capacitor is used, quantization noise is still high due to the charge packet size of approximately 3,000 electrons assuming 0.5 V reference voltage. In this configuration, capacitor voltage is compared with a reference signal V_{ref}, and if the capacitor voltage is same as V_{ref}, the comparator is triggered and the counter stores the number of counts in each frame. TDI operation is realized by using the orthogonal transfer method. The orthogonal transfer structures incorporate registers and a multiplexer, and transfers the digital data stored in the counters to the left, right, up or down registers. Although advanced node CMOS process technology is used in this

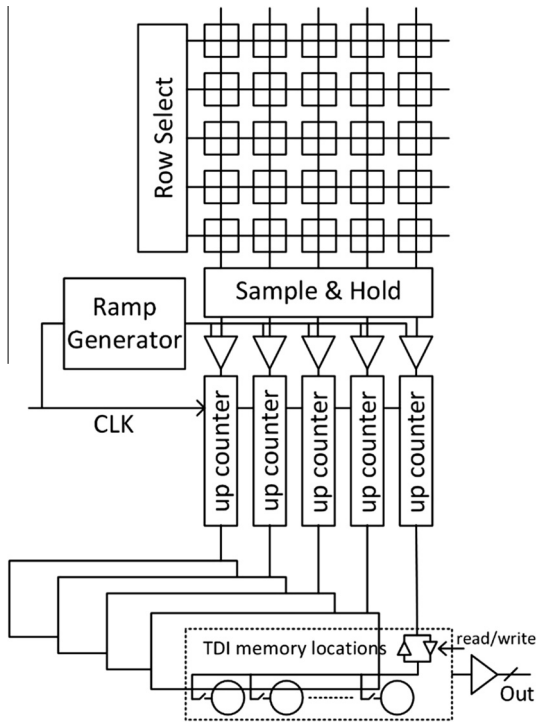

Fig. 2. Digital TDI ROIC example [21].

digital pixel sensor architecture, it is still not possible to have a small pixel pitch, because comparator, reset circuit together with the counter and orthogonal transfer register occupy large pixel area.

Different from the previously described DROIC implementations, there are also some methods that combine PFM technique with some other techniques to reduce quantization noise. One of them is called time-frequency fusion digital pixel sensor, combining the pulse-frequency-modulation technique and the time-to-digital conversion technique [28]. MSBs of the final digital output are generated by the PFM technique, whereas LSBs of the final digital output are generated by the time-to-digital conversion technique. The other technique to reduce the quantization is the extending counting technique, which uses the PFM technique for MSBs while using extending counting for LSBs [29]. However, these DROIC techniques have not been implemented for TDI applications.

3. Proposed architecture

The proposed digital TDI ROIC is based on the conventional PFM architecture, but is improved in terms of quantization noise for better performance in the low illumination conditions. The proposed method combines the use of the simple PFM architecture for coarse quantization and the single slope ADC architecture for the fine quantization. Instead of using a very small integration capacitor as in [23], a relatively large integration capacitor of 40fF is chosen in order to have less number of comparator triggers, hence less power consumption. Despite using a large integration capacitor, the quantization noise is kept low with the use of a single slope ramp ADC. Fig. 4 shows the proposed digital TDI ROIC architecture and Fig. 5 shows the timing diagram of the proposed architecture.

The proposed digital TDI architecture has two phases, namely the integration phase and the residual phase. A ramp generator generates a ramp signal starting from the reset level reaching the reference value during the residual phase and the reference value is fixed during the integration phase. Integration capacitor voltage is compared with the fixed reference voltage during the integration phase. When two signal values become equal, the comparator switches and the integration capacitor is auto-reset by the reset circuit. Each time the comparator is switched, the corresponding MSB counter is also triggered. Number of comparator triggers determine the MSB counter output. At the end of the frame, there will be residual charges remaining on the integration capacitor due to quantized charge packets. These residual charges on the integration capacitor are measured by the single slope ramp ADC in the residual phase. Ramp generator output is compared with the residual voltage on the capacitor in that phase. If the integration capacitor voltage is greater than the ramp generator output voltage, LSB counter keeps counting the number of clock cycles. When ramp generator output is equalized with residual voltage, the comparator is triggered and the LSB counter stops counting the clock cycles. The ramp generator sweeps the whole dynamic range in 256 clock cycles. For example, if the residual charge on integration capacitor is half of the full charge packet, that means 128 clock cycles will be counted by the LSB counter.

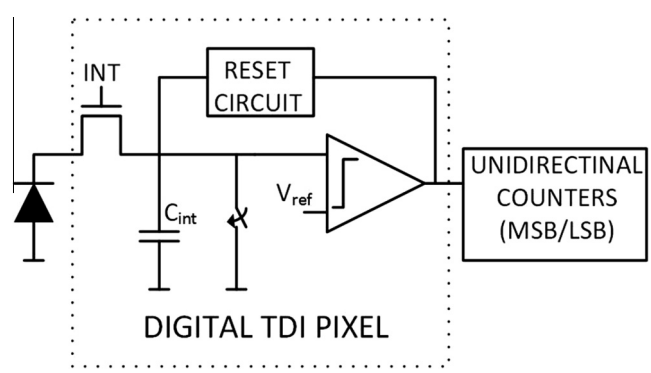

Fig. 4. Proposed digital TDI ROIC architecture.

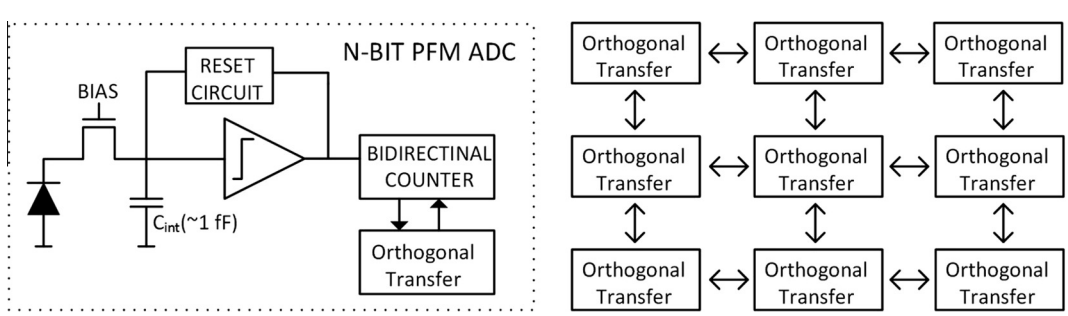

Fig. 3. Pulse frequency modulation (PFM) architecture for digital pixel readouts [26].

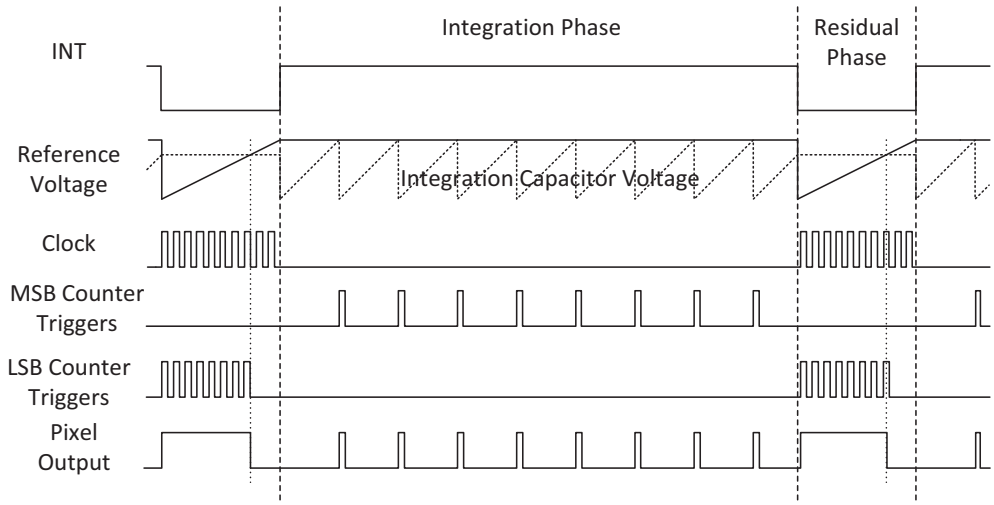

Fig. 5. Timing diagram of the proposed digital TDI ROIC.

Apart from the pixel implementation of digital TDI architecture, implementation of TDI functionality in architectural level is also important. Each output should contain all pixel contributions in order to have an improved SNR. Implementing TDI functionality is trivial if there is no oversampling, because each counter value can be shifted by one and the next pixel contribution can be added to this pre-set value as in [23]. However, it becomes a complex issue when oversampling comes into the picture. Oversampling rate stands for the number of steps that is required for a particular scene to move from one pixel to the adjacent one. Fig. 6 shows the TDI operation for an oversampling rate of 2. "A-B-C-D" letters represent a different scene for each new frame. D1-D8 represent 8 detectors or pixels which are the TDI elements. In the first frame, letter "A" impinges on the first pixel. Since the oversampling rate is 2, letter "A" impinges on the second pixel in the third frame. A similar scenario is also valid for other letters. It takes 16 frames for a particular scene to pass over all 8 pixels and to be transferred to the output, which means 16 different counters are needed to store the information. Table 1 shows the write and read sequence of the TDI counters to better understand the TDI operation with oversampling rate of 2. In each two frames, a new pixel data is written to the TDI counters and all write operations are completed in 15 frames. In the 16th frame, the final accumulated value in the counters is read out. The proposed architecture compatible with this TDI operation is presented in Fig. 7. Each pixel has connections to all counters that are controlled by the switches. In each frame, a pixel is connected to a different counter as shown in Table 1. Since all pixels are connected to all counters in different frames as shown in Fig. 7, all 8 wires placed for each pixel in a row are in equal lengths and there is no signal delay non-uniformity problem related to different wire lengths. The control circuit determines which switch should be activated or deactivated in each frame. The digital control circuit also controls the counter control signals (enable, write, read) and which counter output is multiplexed to the output. There is a serializer that takes the counter output data and shifts one by one to the output in each clock cycle.

4. Implementation

The proposed digital TDI ROIC architecture is composed of 5 main building blocks, which are pixels, counters, digital control block, ramp generator and serializer. For the pixel design charge handling capacity, integration capacitor value, quantization noise and power consumption are to be decided first of all. Although inverter based comparator is used in many PFM architectures due to its small area, less power consumption and simple design, a self-biased differential amplifier based comparator topology [30] is chosen in order to meet the adjustable reference voltage and power consumption requirements. This comparator topology also does not require any external biases, which simplifies the pixel design and routings, is another factor why this topology is chosen. Since digital TDI ROIC is designed to be operated in cryogenic temperatures (77 K) and threshold voltage (Vth) increases significantly in cryogenic temperatures, which limits the comparator input swing, 2.5 V supply voltage is preferred for the pixel design instead of 1.8 V. Fig. 8 shows the schematic of the proposed pixel design. The integration capacitor size is decided as 32fF in order to meet the charge handling capacity, quantization noise specifications and to fit into 15 μm × 15 μm pixel area. When V_{ref} is same as the integration capacitor voltage, comparator is triggered and the auto-reset feedback circuit resets the integration capacitor. This process continues until the end of the integration time. There is a NAND gate in the auto-reset feedback circuit, which is used to differentiate the integration phase and the residual phase. When the residual phase starts, this NAND gate prevents the integration capacitor to be reset and at the same time supplies the control signal for the LSB counter. Fig. 5 shows how the pixel output is synchronized with the comparator output in the residual phase. The width of the pixel output pulse in the residual phase is proportional to the residual charge on the integration capacitor.

The charge packet in a single count can be found as:

$$Q = \frac{C_{int\times}(V_{ref} - V_{cap})}{q} = \frac{40fF \times 0.7V}{1.602 \times 10^{-19}} \cong 175,000e^{-} \quad (1)$$

The integration capacitor in (1) is taken as 40fF due to the parasitic capacitors coming from 5 MOS transistors and routings connected to the integration capacitor node in addition to 32fF MIM capacitor. After calculating the charge packet for a single count, number of bits for the MSB counter can be decided considering the charge handling capacity. Conventional TDI ROICs have a charge handling capacity between 10 and 20 Me^{-}. Thus, 8 bits of MSB counter will be more than enough for a typical scanning array ROIC. In this case, the total charge handling capacity can be calculated as:

$$Q_{total} = 2^8 \times 175,000e^{-} = 44,8Me^{-} \quad (2)$$

Another important point of the proposed architecture is the number of LSB bits, which will determine the quantization noise. In order to minimize the quantization noise and keep the residual phase as small as possible, the number of LSB bits is chosen as 8

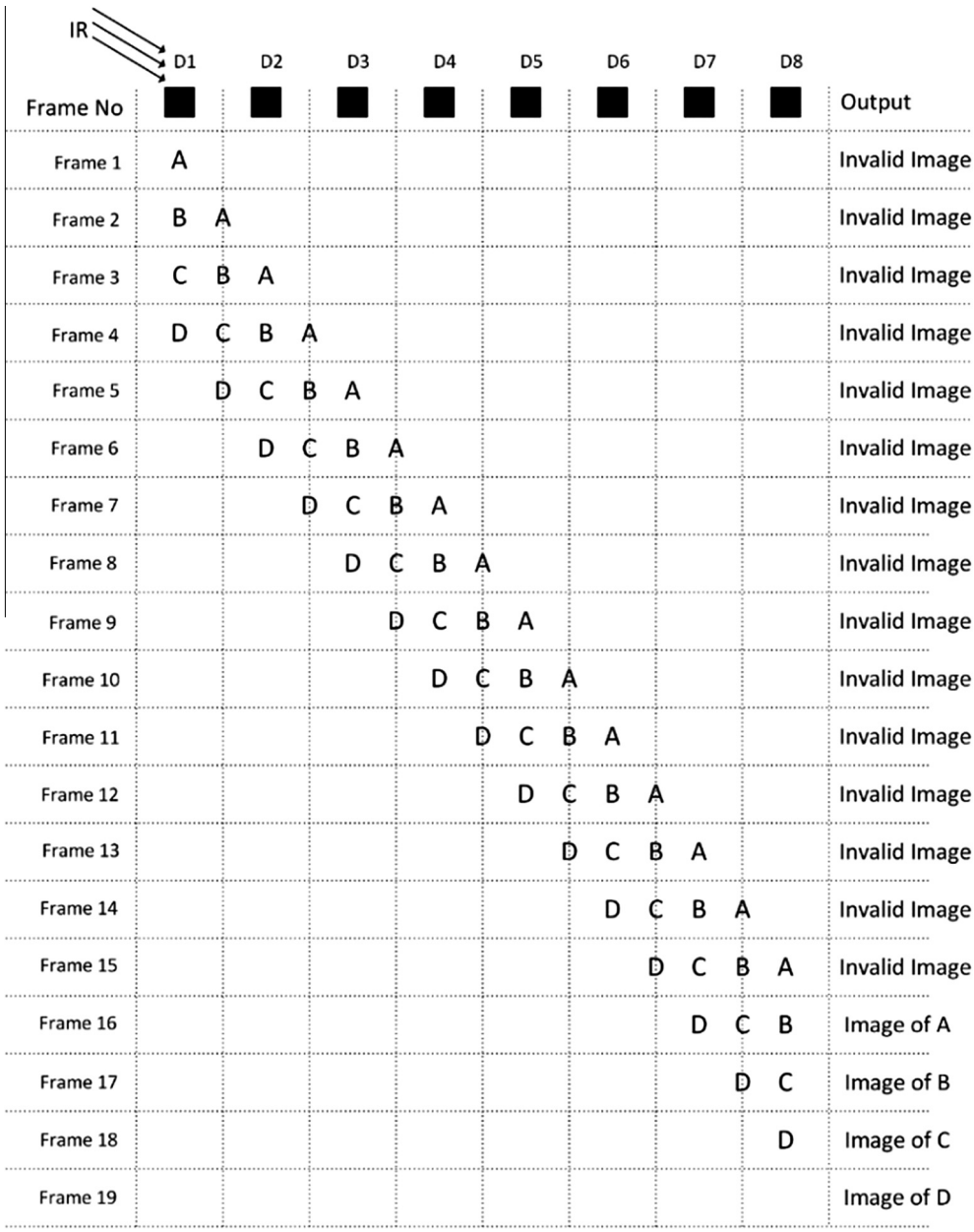

Fig. 6. TDI operation with an oversampling rate of 2.

bits. Since a single slope ADC is used for the LSB part of the design, 256 clock cycles are required to sweep the whole dynamic range. In this case, the quantization noise will be:

$$QN = \frac{C_{int\times}(V_{ref} - V_{cap})}{q \times 256 \times \sqrt{12}} \cong 198e^{-} \tag{3}$$

After deciding on the integration capacitor, the number of MSB and LSB bits and the number of MSB counts for a given photocurrent, the noise of the proposed architecture can be calculated. The MSB counter value in this architecture is given as:

$$N_{MSB-counts}(i_{ph}) = i_{ph} \times t_{int}/C_{int} \times (V_{ref} - V_{cap}) \tag{4}$$

where i_{ph} is the photocurrent, t_{int} is the integration time, C_{int} is the integration capacitor, V_{ref} is the comparator's reference voltage coming from the ramp generator and V_{cap} is the capacitor reset voltage. A detailed analysis of the PFM pixel can be found in [26]. The proposed architecture is different in two ways from the PFM architecture in [26]. The first difference is the use of the self-biased differential amplifier based comparator instead of the inverter based comparator. The second difference is the ramp generator that is supplying the reference voltage to the comparator's other input, whereas there is no other input in the inverter based comparator configuration. Thus, the equation in [26] is modified as follows:

$$\begin{aligned} n_{e-T-N} = \Bigg\{ & \Bigg[\left(\frac{C_{int}(V_{ref} - V_{cap})}{q} + \frac{kTC_{int}}{q^2} + \frac{e^2_{pa-white} t_{int}}{2q^2 R_d^2 N_{counts}} \right. \\ & \left. + \frac{8kTC^2_{int} N_{MSB-counts}}{3q^2 g_m t_{int}} + \overline{V^2_{ramp-gen}} \right) N_{MSB-counts} \Bigg] \\ & + \left[i_T^2 \left(\alpha^2_{1/f} + \alpha^2_{comp@1Hz} \right) + i_R^2 \alpha_R^2 + \frac{e^2_{DI_n@1Hz}}{R_d^2} \right] \left(\frac{t^2}{q^2} \right) ln \left(\frac{t_{samp}}{t_{int}} \right) \\ & + \frac{C^2_{int}(V_{ref} - V_{cap})^2}{12q^2 256^2} \Bigg\}^{0.5} \end{aligned} \tag{5}$$

Table 1
Write/read sequence of the TDI counters.

Frame no	C1	C2	C3	C4	C5	C6	C7	C8	C9	C10	C11	C12	C13	C14	C15	C16
1	D1															
2		D1														
3	D2		D1													
4		D2		D1												
5	D3		D2		D1											
6		D3		D2		D1										
7	D4		D3		D2		D1									
8		D4		D3		D2		D1								
9	D5		D4		D3		D2		D1							
10		D5		D4		D3		D2		D1						
11	D6		D5		D4		D3		D2		D1					
12		D6		D5		D4		D3		D2		D1				
13	D7		D6		D5		D4		D3		D2		D1			
14		D7		D6		D5		D4		D3		D2		D1		
15	D8		D7		D6		D5		D4		D3		D2		D1	
16	**R**	D8		D7		D6		D5		D4		D3		D2		D1
17	D1	**R**	D8		D7		D6		D5		D4		D3		D2	
18		D1	**R**	D8		D7		D6		D5		D4		D3		D2
19	D2		D1	**R**	D8		D7		D6		D5		D4		D3	
20		D2		D1	**R**	D8		D7		D6		D5		D4		D3

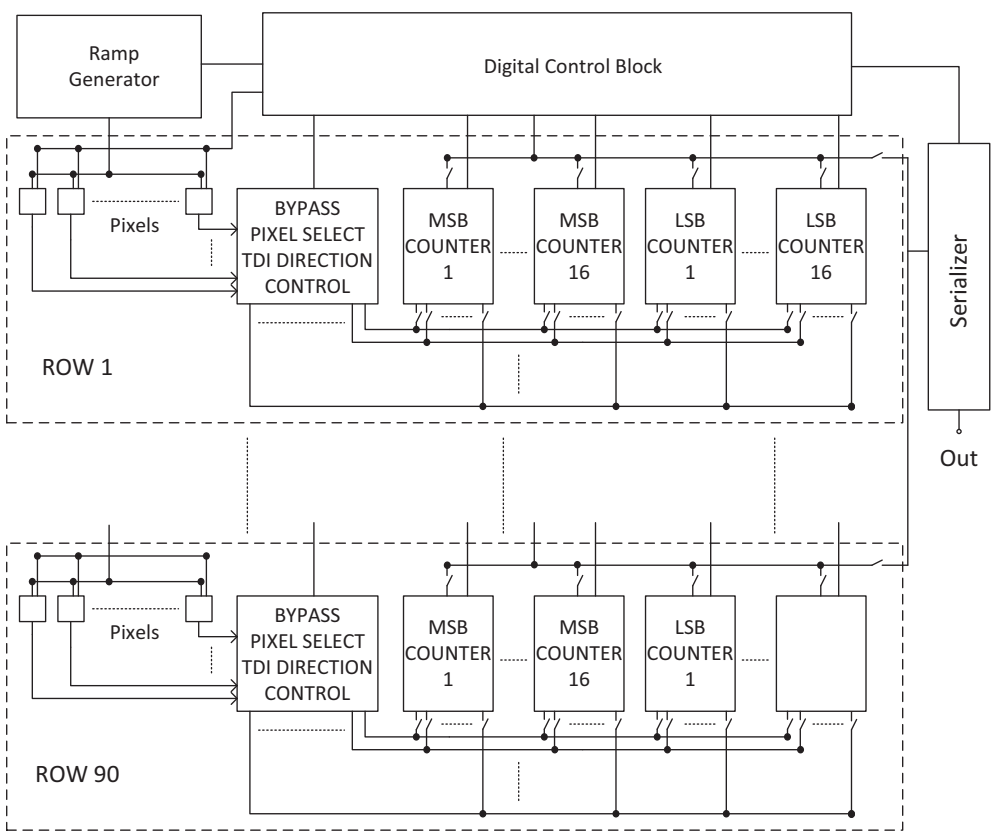

Fig. 7. Digital TDI ROIC architecture for a 90 × 8 array with an oversampling rate of 2.

where q is the electron charge, (V_{ref}-V_{cap}) is the integration capacitor voltage swing, $e_{pa-white}$ is the white noise component of the preamplifier noise, R_d is the dynamic impedance of the detector, τ is the average time per count, g_m is the transconductance of the comparator, k is Boltzmann's constant, T is temperature, i_T is the detector current, i_R is the ramp generator current and $\alpha_{1/f}$, α_{comp}, α_R, e_{DI_n} correspond to the detector, comparator, ramp generator and injection pre-amplifier 1/f noise contribution factors, t_{samp} is the measurement time, and t_{int} is the integration time. The first bracket corresponds to the white noise components; the shot noise, reset (kTC) noise, preamplifier noise, comparator noise and ramp generator noise. The number of noise electrons in a single count is multiplied by $N_{MSB^-counts}$. The second bracket corresponds to the 1/f noise components from the detector, the comparator, the ramp generator and the injection preamplifier. Finally, the last term corresponds to the quantization noise.

The proposed digital TDI architecture does not include counters and registers in the pixel unlike the digital pixel sensors. Digital pixel sensors which includes the counter and the memory in the pixel area requires at least 25 μm pixel pitch, which contradicts with the SWaP trend. Since the proposed digital TDI ROIC is designed for a scanning array system, there is no need to put every-

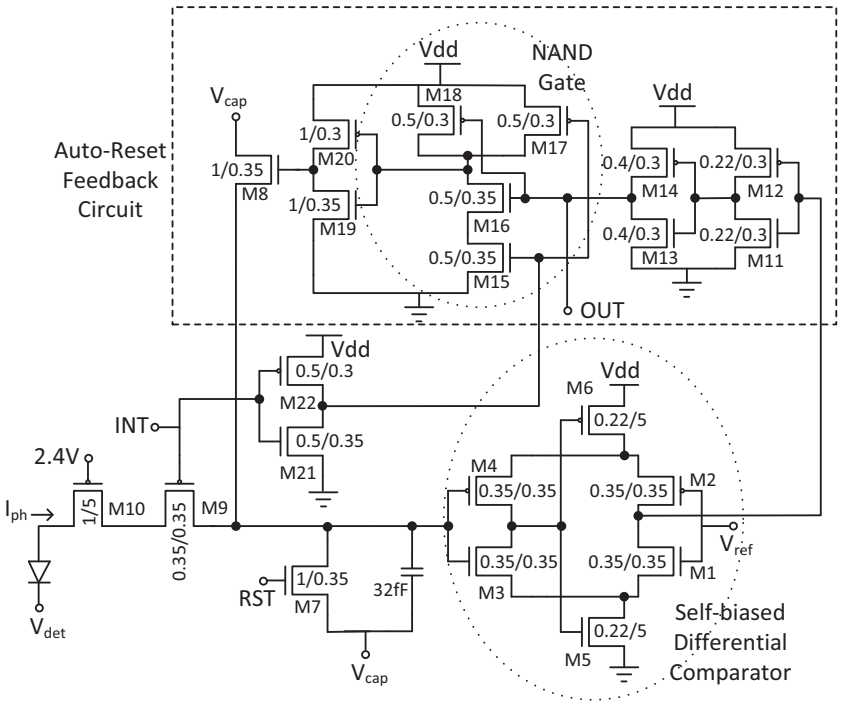

Fig. 8. Pixel schematic, transistor sizes in μm.

thing in the pixel like in staring array systems. It is possible to put digital circuits nearby the pixel array, which will replace the analog storage elements in analog TDI ROICs. Putting digital circuits nearby the pixel array enables smaller pixel pitches and improves the spatial resolution. Most of the conventional analog TDI ROICs employ oversampling to improve the spatial resolution of the system, which exacerbates the system complexity. The proposed digital TDI ROIC proves that it is possible to have smaller pixel pitches and reduced oversampling rates or even no oversampling, which enables less complex, less power hungry and less noisy TDI imaging systems. Fig. 9 shows the pixel layout of the proposed ROIC.

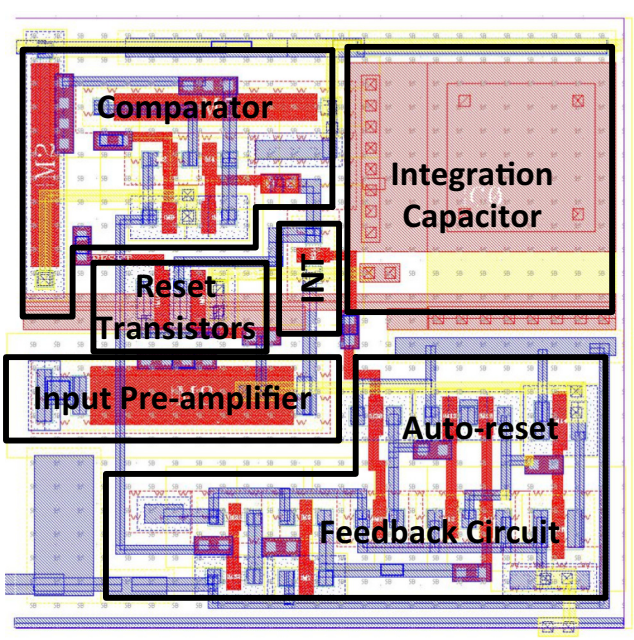

Fig. 9. Pixel layout of the proposed digital TDI ROIC, dimensions: 15 μm × 15 μm.

Pixel dimensions are 15 μm × 15 μm. The reason behind this specific size was the popularity of 15 μm LWIR detectors at the time this work was started. As it can be figured out from the pixel layout, it is possible to have a pixel pitch of 10 μm with a smaller integration capacitor. This smaller pixel pitch of 10 μm will also eliminate the use of oversampling, which will also halve the number of MSB and LSB counters resulting in a less chip area.

Apart from the 8 pixels, there are also bypass/TDI direction/pixel deselection switches, MSB and LSB counters and their read/write control switches and multiplexers in a row. In bypass mode of operation, each one of the 8 pixels in a row can be selected individually and connected to the corresponding counters, hence dead pixels can be detected individually. The TDI direction switches control the arrangement of pixel connections to corresponding counters. In the positive TDI direction, the first pixel is connected to the first counter in the first frame as it is shown in Table 1. However, in the negative TDI direction, 8th pixel becomes the first pixel, which means pixels are connected in the reverse order to the counters. This feature proves useful for the scanning array systems, which enables the system to operate at both scan directions. Pixel deselection switches are used to select which pixels are connected to the counters. Defective pixels detected in bypass mode are switched-off and not connected to counters. Both the MSB and LSB counters are ripple carry counters implemented with D flip-flops. Each counter has a multiplexer controlled by the digital control circuit to select which pixel is connected to this counter in a particular frame. Each MSB and LSB counter has 11 bit registers that are required to add 8 bit contributions of 8 different pixels in a row. There are 16 MSB and LSB counters required to store data related to 16 different scenes as presented in Table 1. After the 1st counter output its data, it is ready to accept new data related to a new scene. MSB counters and LSB counters have separate 11 bit output buses for each row. When a row is multiplexed by the control circuit to the output bus, 22 bits are connected to the serializer, which accepts 11 bit MSB and 11 bit LSB data in parallel, and shifts these 22 bits one by one as a serial output. Both the digital control logic and the serializer are synthesized, placed and routed with

180 nm junction isolated standard cell library. Apart from the blocks mentioned above there is also a ramp generator block that is realized by an integrator op-amp, which supplies the reference voltage to all pixels during the integration and the residual phases. The digital control logic supplies digital signals for all blocks including pixels, bypass/TDI direction/pixel deselection switches, counters, multiplexers, serializer, ramp generator. The digital TDI ROIC can be programmed through either a serial or a parallel interface. Parallel programming capability is used to operate the ROIC in basic operation mode. It includes all bypass and TDI modes of operation with certain number of pre-defined integration times. If an integration time different than these pre-defined ones required, then it is possible to program the ROIC through the serial interface. Pixel deselection feature is also accessible only through the serial interface. Fig. 10 shows the 90 × 8 prototype of the digital TDI ROIC. Most of the chip area is occupied by 32(16 MSB + 16 LSB) 11 bit ripple carry counters. Each counter also has multiplexers and buffers to drive the long output buses which increases the counter area. Another important factor that increases the counter area is the use of oversampling to improve spatial resolution. In the case where there is no oversampling, 18 counters (9 MSB + 9 LSB) are enough. It is also possible to use counters with dynamic pulsed D flip-flops like in [31] that will occupy less chip area instead of using conventional D flip-flops. However, the proposed ROIC is implemented for the proof of concept to show the benefits of using digital ROIC architectures for TDI applications, not focusing on the area efficient counter design.

5. Measurement results

Charge handling capacity, quantization noise, signal-to-noise ratio, power dissipation of the proposed digital TDI ROIC are verified at cryogenic temperature (77 K). Due to the lack of a LWIR detector to couple to the ROIC, the test current sources, that are immune to process variations and mismatches [32], are used to mimic detector pixels. The test current sources can generate current in the range of 0–30 nA with a maximum variation of 10%. As explained in Section 4, the charge packet associated with a single count of the MSB counter is 175,000 e^-. Maximum charge handling capacity of 44.8 Me^- is verified by saturating the MSB counter with a sufficient amount of input current and integration time. The quantization noise of the proposed ROIC is verified by just activating the LSB counter (single slope ramp ADC) of the ROIC with limited input current and integration time. The total resolution is 16 bits with 8 bits of MSB and 8 bits of LSB.

The proposed ROIC is measured with various input currents and integration times. With fixed input current, doubling the integration time also doubled the output count. Same behavior is observed by repeating the same operation several times. Since almost all blocks are connected to different I/O pads, it is possible to measure the power dissipation of all blocks separately. Table 2 shows the power dissipation of various blocks of the digital TDI ROIC with nominal switching activity with an input current of 10 nA and maximum switching activity with an input current of 30 nA. Since the proposed ROIC is a PFM based architecture, with increasing input current and integration time, the switching activity of the pixels and counters also increases, which results in an increased dynamic power consumption. This behavior is also verified with the measurements.

The proposed digital TDI ROIC has also been evaluated in terms of noise performance. It has been observed that with increasing switching activity the measured SNR of the ROIC deviates from the shot noise limit. This deviation from the shot noise limit is observed with both increasing input current and integration time, hence can be linked with the switching noise. Similar behavior

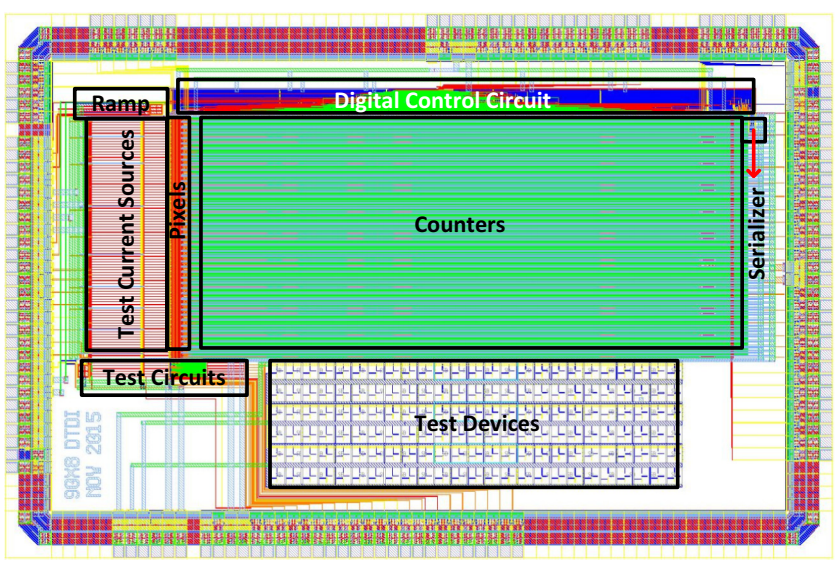

Fig. 10. 90 × 8 digital TDI ROIC layout, dimensions: 4.6 mm × 3 mm.

Table 2
Power dissipation of the 90 × 8 digital TDI ROIC for nominal and maximum switching activities.

Block	Average current (Max)	Average current (Nominal)	Supply voltage (V)	Power dissipation (Max)	Power dissipation (Nominal)
Pixel + ramp generator	3.56 mA	3.02 mA	2.5	8.9 mW	7.55 mW
Control block	1.25 mA	1.25 mA	1.8	2.25 mW	2.25 mW
Counters	2.05 mA	1.77 mA	1.8	3.69 mW	3.186 mW
Analog I/O pads	7.5 μA	5.39 μA	3.3	24.75 μW	17.787 μW
Digital I/O pads	0.55 mA	0.41 mA	3.3	1.815 mW	1.353 mW
Total				16.779 mW	14.356 mW

related to the switching noise is also reported in some DROIC works [29,33]. In the low illumination conditions where the collected electrons are less than 4 Me$^-$, very good SNR results are observed due to the significantly reduced quantization noise with the use of single slope ramp ADC and the effect of TDI architecture. Fig. 11a shows the SNR graph for the low the illumination conditions while Fig. 11b shows the SNR graph for whole dynamic range. The minimum SNR value for the low illumination conditions is measured as 51 dB, which is a very good SNR value for the collected electrons of 280 Ke$^-$. The measured peak SNR value for the digital TDI ROIC is 72 dB. If the switching noise performance of the ROIC is improved with a better isolation of the sensitive comparator from digital circuitry, better SNR values for the high illumination conditions are possible.

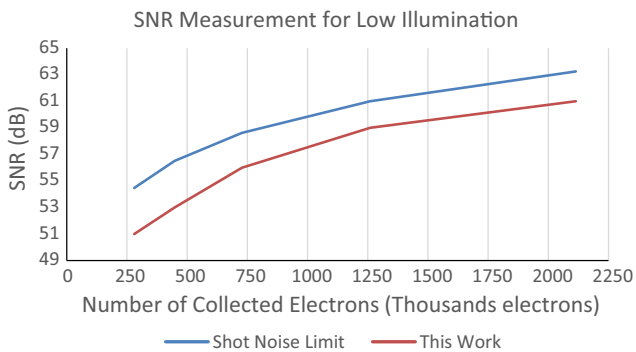

Fig. 11a. SNR measurement for low illumination conditions.

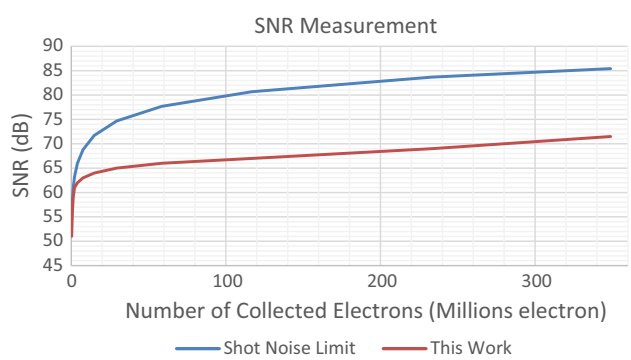

Fig. 11b. SNR measurement for whole dynamic range.

Table 3
Performance parameters of the proposed digital TDI ROIC.

Parameter	Value
Array format	90 × 8
Infrared band	LWIR
Operating Temperature	77 K
Pixel dimensions	15 μm × 15 μm
Oversampling rate	2
Input current	1–50 nA
Resolution	16 bits (8 bits MSB, 8 bits LSB)
Operating frequency	Up to 200 MHz
Frame rate	70 K lines/s
Power dissipation	14.35 mW (for input current of 10 nA)
Charge handling capacity	44.8 Me$^-$ (for single pixel)
Quantization noise	198 e$^-$
SNR	72 dB
Programming	Serial/parallel programming, bypass mode, programmable scan direction, integration time, pixel deselection

Table 3 shows the performance summary of the proposed digital TDI ROIC. ROIC can operate up to 200 MHz. The speed of the ROIC is 70 K lines/s. Single pixel charge handling capacity is 44.8 Me$^-$ resulting in 358 Me$^-$ for 8 TDI pixels. 198 e$^-$ quantization noise offers significantly improved SNR values for the low illumination conditions, which is the main motivation factor for most TDI applications. 14.35 mW power consumption is also very important for the SWaP trend of infrared imaging systems.

6. Conclusion

A new digital pixel ROIC, implementing TDI method for scanning type IRFPA arrays, is proposed and a 90 × 8 prototype array is fabricated in 180 nm CMOS process. The proposed DROIC is based on the PFM architecture and improved with the single slope ramp ADC. 51 dB SNR is achieved for 280,000 collected electrons with the help of 198 e$^-$ reduced quantization noise, which improves the SNR especially in the low illumination conditions. Measurement results show that for the high illumination conditions switching noise limits the SNR performance of the digital TDI ROIC. However, it is still possible to achieve high SNR values such as 80 dB for 350 Me$^-$ collected electrons from 8 TDI pixels. Due to the switching noise limitations, 72 dB peak SNR is measured for the input current of 10 nA. The proposed digital TDI ROIC is also a power efficient architecture compared to the analog TDI implementations. For a nominal input current of 10 nA, 14.35 mW power dissipation is measured, which is lower than any analog TDI examples.

Table 4 shows the comparison of the proposed digital TDI ROIC with the analog and the digital TDI ROICs. Two of the TDI ROICs are designed for CMOS image sensors whereas the others for LWIR applications. Since CMOS image sensors are exposed to the visible range of the EM spectrum, their charge handling capacity is limited to kilo electrons range. They also do not need a large pixel pitch due to the use of the conventional 4T pixel architecture. Since they do not need large pixels, they also do not need oversampling to improve the spatial resolution. Due to these different specifications related to the CMOS image sensor applications, it is not fair to compare the performance parameters of these ROICs designed for CMOS image sensors with the TDI ROICs designed for LWIR applications. All the digital TDI ROICs for CMOS image sensors exhibit low power consumption per pixel. For example, 1024 × 128 array of [25] consumes 290 mW power, which means 2.21 μW per pixel. This digital TDI ROIC uses a cyclic ADC together with a digital accumulator. One of the reasons that this circuit consumes less power is the speed of the ROIC, which is 3875 lines/s. Since the ROIC operates in integrate-then-read mode, the operating frequency is slow.

The only example of the digital TDI ROIC for the LWIR applications is shown in [26]. This DROIC uses the conventional PFM architecture in order to have a large charge handling capacity, which is 260 Me$^-$ for the TDI application. In fact, this DROIC is not designed specifically for the TDI applications but is shown to operate for the TDI operation successfully. Since 16-bit counter and orthogonal transfer registers to implement the TDI functionality are put in the pixel, this DROIC needs at least 30 μm pixel pitch although it uses 90 nm CMOS process. Considering the SWaP trend and small pixel pitches of the detector vendors, this DROIC with 30 μm pixel pitch is not compatible with industry's trend. To overcome this problem even more advanced CMOS process nodes such as 28 nm is needed for this type of DROIC architectures. Another disadvantage of this DROIC is the high quantization noise due to the large charge packet size. The main advantage of this DROIC is the very low power consumption per pixel and very high data rate

Table 4
Comparison of the proposed digital TDI ROIC with analog TDI ROICs.

	ROIC type	Detector type	Tech. node	Over-sampling	Speed	Format	Pixel pitch (μm)	Charge handling capa.	Power dis. per pixel (μW)	Noise
[34]	Analog	N/A	500 nm	Yes/3	50 Hz	288 × 4	56 × 43	12.5	69.44	2000 e^-
[9]	Analog	LWIR	350 nm	No	50 Hz	32 × 4	30 × 30	6.75	781.25	N/A
[35]	Analog	LWIR	600 nm	No	50 Hz	576 × 6	56 × 43	17 Me^-	28.93	1300 e^-
[24]	Analog	CMOS	180 nm	No	3875 lines/s	1024 × 128	15 × 15	NA	3.81	N/A
[26]	Digital	LWIR	90 nm	No	155 Hz	256 × 256	30 × 30	260 Me^-	1.02	N/A
[25]	Digital	CMOS	180 nm	No	3875 lines/s	1024 × 128	15 × 15	N/A	2.21	N/A
This work	Digital	LWIR	180 nm	Yes/2	70 K lines/s	90 × 8	15 × 15	358 Me^-	17.90	1260

compared to the other digital TDI ROIC examples. It is also possible to operate these ROICs with high frame rates.

There are many examples of the analog TDI ROICs in the literature. Almost all analog ROICs except the one in [24] occupy large pixel area and consume a large amount of power due to the reasons mentioned in Section 2. They are also limited in the charge handling capacity. The 128-stage analog accumulator TDI ROIC in [24] has the same pixel pitch with this thesis work and lower power consumption per pixel. The first reason why this ROIC consumes less power than this work is the operation speed of the ROIC, which is approximately 15 times slower than this work. Another important factor for the lower power consumption is that the analog accumulator TDI ROIC is designed for CMOS image sensors, which have a very limited charge handling capacity. In other words, it eliminates the use of the in-pixel comparator that is used in this work, which consumes most of the ROIC power according to Table 2, and just operates with the LSB part of this work. The analog accumulator ROIC also does not use oversampling which also saves a considerable amount of power.

As a result, the digital TDI ROIC, that is proposed in this work, offers smaller pixel pitch, higher charge handling capacity, lower power consumption and comparable noise performance compared to the analog TDI ROICs. With a careful design and layout by paying attention to the isolation of the pixel comparators from the digital circuitry, the digital TDI ROIC also exhibits the potential for better noise performance. The proposed digital TDI ROIC implements the PFM architecture to the scanning array systems and improves the quantization noise of the PFM architecture with a single slope ramp ADC. The digital TDI ROIC does not require a large integration capacitor in-pixel like in analog TDI ROICs, hence enables smaller pixel pitch and higher charge handling capacity, which is in line with the SWaP trend. Compared to the digital TDI ROIC examples using the column parallel ADC architecture, the implemented digital TDI ROIC in this work has better signal integrity due to the digital signal chain. Considering the different performance parameters such as oversampling and charge handling capacity, the digital TDI ROIC implemented in this work also exhibits similar power consumption with an improved quantization noise, hence improved noise and SNR performance. The proposed digital TDI ROIC also has larger charge handling capacity compared to the column parallel ADC architectures. Compared to the single example of digital TDI ROIC for LWIR applications, the proposed digital TDI ROIC has smaller pixel pitch and better quantization noise. Although the digital TDI ROIC in [26] has a better power consumption performance compared to this work, it requires large pixel pitch as opposed to the small pixel pitch trend of the industry. It also requires advanced process node and has a large quantization noise.

References

[1] C.-C. Hsieh, C.-Y. Wu, F.-W. Jih, T.-P. Sun, Focal-plane-arrays and CMOS readout techniques of infrared imaging systems, IEEE Trans. Circuits Syst. Video Technol. 7 (4) (August 1997) 594–605.

[2] P. Tribolet, G. Destefanis, Third generation and multi-color IRFPA developments: a unique approach based on DEFIR, in: SPIE, Orlando, 2005.

[3] L. Dan, T. Ju, L. Wengao, C. Zhongjian, Z. Baoying, J. Lijiu, Low power design of column readout stage for 320x288 snaphot infrared ROIC, in: IEEE Conference on Electron Devices and Solid-State Circuits, 2005.

[4] A. Ezerskaia, S.F. Pereira, H.P. Urbach, B. Varghese, Inter- and intra-individual differences in skin hydration and surface lipids measured with mid-infrared spectroscopy, in: SPIE Optical Diagnostics and Sensing XVI: Toward Point-of-Care Diagnostics, 2016.

[5] J.E. Rushton, K.D. Stefanov, A.D. Holland, J. Endicott, F. Mayer, F. Barbier, A CMOS TDI image sensor for earth observation, in: SPIE Nanophotonics and Macrophotonics for Space Environments IX, 2015.

[6] N. Kai-ming, Y. Su-ying, X. Jiang-tao, G. Jing, Modeling and simulation of TDI CMOS image sensors, in: SPIE International Symposium on Photoelectronic Detection and Imaging: Infrared Imaging and Applications, 2013.

[7] A. Eckardt, R. Reulke, M. Jung, K. Sengebusch, CMOS-TDI detector technology for reconnaissance application, in: SPIE Electro-Optical and Infrared Systems: Technology and Applications XI, 2014.

[8] B.J. Chen, Pipelined Amplifier Time Delay Integration, US Patent US 7532242 B1, 12 May 2009.

[9] F.-K. Tsai, H.-Y. Huang, A time-delay-integration CMOS readout circuit for IR scanning, in: 9th International Conference on Electronics, Circuits and Systems, 2002.

[10] O. Ceylan, MSc Thesis Realization of Readout Integrated Circuit (ROIC) for an Array of 72x4, P-on-N type HgCdTe Long Wave Infrared Detectors, Sabancı University, 2008.

[11] H. Kayahan, M. Yazici, O. Ceylan, M.B. Baran, Y. Gurbuz, Design of ROIC based on switched capacitor TDI for MCT LWIR focal plane arrays, in: SPIE Infrared Technology and Applications, 2011.

[12] M. Kobayashi, H. Wada, T. Okamura, J. Kudo, K. Tanikawa, S. Hikida, Y. Miyamoto, S. Miyazaki, Y. Yoshida, 480X8 hybrid HgCdTe infrared focal plane arrays for high-definition television format, Opt. Eng. 41 (8) (2002) 1876–1885.

[13] E. Mottin, P. Pantigny, Device for reading detector arrays with TDI effect, US Patent 5828408, 27 October 1998.

[14] W.-L. Wang, S. Lin, C.-P. Lin, F.-K. Hsiao, Time delay integration based MOS photoelectric pixel sensing circuit, US Patent US2011/0019044 A1, 27 January 2011.

[15] M.F. Audier, V. Besnard, G. Rigaux, Circuit for the reading of linear arrays of photodetectors, US Patent 59998777, 7 December 1999.

[16] K.-W. Cheng, C. Yin, C.-C. Hsieh, W.-H. Chang, H.-H. Tsai, C.-F. Chiu, Time-delay integration readout with adjacent pixel signal transfer for CMOS image sensor, in: International Symposium on VLSI Design, Automation, and Test, 2012.

[17] K. Faramarzpour, M.E. Sonder, CMOS time delay and integration image sensor, US Patent 8975570 B2, 10 March 2015.

[18] P. Pantigny, Device for detecting a photonic flux with self-adaptive scanning, US Patent 7358996, 15 April 2008.

[19] F. Serra-Graells, B. Misischi, E. Casanueva, C. Mendez, L. Teres, Low-power and compact CMOS APS circuits for hybrid cryogenic infrared fast imaging, IEEE Trans. Circuits Syst.-II: Express Briefs 54 (12) (2007) 1052–1056.

[20] G. Lepage, J. Bogaerts, G. Meynants, Time-delay-integration architectures in CMOS image sensors, IEEE Trans. Electron Devices 56 (11) (2009) 2524–2533.

[21] J. Bogaerts, S.K. Waver, Analog-to-digital conversion in pixel arrays, US Patent 7880662 B2, 1 February 2011.

[22] Y. Muramatsu, N. Fukushima, Y. Nitta, Y. Yasui, Method and apparatus for AD conversion, semiconductor device for detecting distribution of physical quantity, and electronic apparatus, US Patent 7532148 B2, 12 May 2009.

[23] Y. Katzir, I. Gur-Arie, Y. Malinovich, High-sensitivity optical scanning using memory integration, US Patent 7129509 B2, 31 October 2006.

[24] N. Kaiming, S. Yao, J. Xu, J. Gao, Y. Xia, A 128-stage analog accumulator for CMOS TDI image sensor, IEEE Trans. Circuits Syst.-I: Regular Papers 61 (7) (2014) 1952–1961.

[25] K. Nie, J. Xu, Z. Gao, A 128-stage CMOS TDI image sensor with on-chip digital accumulator, IEEE Sens. J. 16 (5) (2016) 1319–1324.

[26] B. Tyrrell, K. Anderson, J. Baker, R. Berger, M. Brown, C. Colonero, J. Costa, B. Holford, M. Kelly, E. Ringdahl, K. Schultz, J. Wey, Time delay integration and in-pixel spatiotemporal filtering using a nanoscale digital CMOS focal plane readout, IEEE Trans. Electron Devices 56 (11) (2009) 2516–2523.

[27] M. Kelly, B. Tyrrell, C. Colonero, R. Berger, K. Schultz, J. Wey, D. Mooney, C. Lawrence, Focal plane array processing method and apparatus, US Patent 2014/0197303 A1, 17 July 2014.
[28] T.K. Veeder, Time-frequency fusion digital pixel sensor, US Patent 8158923 B2, 17 April 2012.
[29] H. Kayahan, M. Yazici, Ö. Ceylan, Y. Gurbuz, A new digital readout integrated circuit (DROIC) with pixel parallel A/D conversion and reduced quantization noise, Infrared Phys. Technol. 63 (2014) 125–132.
[30] M. Bazes, Two novel fully complementary self-biased CMOS differential amplifiers, IEEE J. Solid-State Circuits 26 (2) (February 1991) 165–168.
[31] B. Tyrrell, R. Berger, C. Colonero, J. Costa, M. Kelly, E. Ringdahl, K. Schultz, J. Way, Design approaches for digitally dominated active pixel sensors: leveraging Moore's law scaling in focal plane readout design, in: SPIE Quantum Sensing and Nanophotonic Devices V, 2008.
[32] H. Kayahan, O. Ceylan, M. Yazici, S. Zihir, Y. Gurbuz, Wide range, process and temperature compensated voltage controlled current source, IEEE Trans. Circuits Syst. I Regul. Pap. 60 (2013) 1345–1353.
[33] S. Bisotto, E.d. Borniol, L. Mollard, F. Guellec, A. Peizerat, M. Tchagaspanian, A 25 um pitch LWIR staring focal plane array with pixel-level 15-bit ADC ROIC achieving 2mK NETD, in: SPIE Electro-Optical Infrared Systems, Technology, Applications VII, 2010.
[34] Z. Chen, W. Lu, J. Tang, Y. Zhang, C. Junmin, L. Ji, A CMOS TDI readout circuit for infrared focal plane array, in: International Conference on Solid-State and Integrated-Circuit Technology (ICSICT), 2008.
[35] F.F. Sizov, Y.P. Derkach, S.V. Korinets, V.P. Reva, 576x6 ROIC for MCT LWIR arrays, in: SPIE Semiconductor Photodetectors II, Bellingham, 2005.